Segment bends, 2 and 3 mm

Diameter for 2 mm: ø140 - ø1000 mm.
Diameter for 3 mm: ø225 - ø1000 mm.

Segment bends are available in other radii and dimensions to order.
2 and 3 mm segment bends are supplied as standard for pull rings [f.b].
Segment bends with D = ø630 mm - ø1000 mm supplied with flange [m.fl].

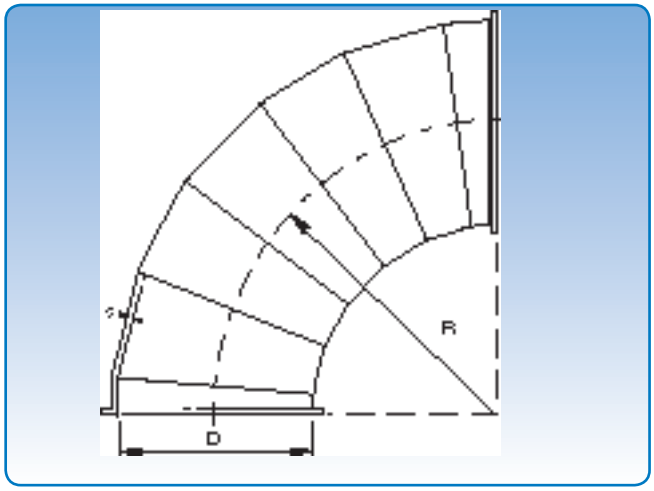

Dimensional specifications are given in the table below.
R = 1.5 x D for all dimensions.

Dimensions

D	s	90°		60°		45°		30°		15°	
mm	mm	Item no.	kg	Item no.	kg	Item no.	kg	Item no.	kg	Item no.	kg
140	2,00	1144292	2,90	1144262	2,00	1144242	1,40	1144232	1,00	1144212	0,50
225	2,00	1149292	7,60	1149262	5,20	1149242	3,80	1149232	2,60	1149212	1,40
275	2,00	11588929	9,60	11588629	7,20	11588429	4,80	1152232	3,60	11588129	1,80
315	2,00	1152292	13,30	1152262	8,60	1152242	6,50	11588329	4,40	1152212	2,20
450	2,00	1155892	24,20	1155862	16,20	1155842	12,10	1155832	8,10	1155812	4,00
500	2,00	1156892	29,90	1156862	20,00	1156842	15,00	1156832	10,00	1156812	5,00
550	2,00	1157892	36,20	1157862	24,20	1157842	18,10	1157832	12,10	1157812	6,00
600	2,00	1158892	43,10	1158862	28,80	1158842	21,60	1158832	14,40	1158812	7,20
630	2,00	1159895	53,78	1159865	38,08	1159845	30,18	1159835	22,18	1159815	14,28
650	2,00	1160895	57,17	1160865	40,37	1160845	31,87	1160835	23,47	1160815	14,97
700	2,00	1161895	65,85	1161865	46,25	1161845	36,45	1161835	26,65	1161815	16,85
750	2,00	1162895	77,67	1162865	55,17	1162845	43,97	1162835	32,67	1162815	21,20
800	2,00	1163895	87,61	1163865	62,01	1163845	49,21	1163835	36,41	1163815	23,61
850	2,00	1164895	98,25	1164865	69,25	1164845	54,85	1164835	40,35	1164815	25,95
900	2,00	1165895	109,40	1165865	77,00	1165845	60,80	1165835	44,50	1165815	28,30
950	2,00	1166895	121,14	1166865	85,04	1166845	66,94	1166835	48,84	1166815	30,84
1000	2,00	1167895	133,58	1167865	93,48	1167845	73,48	1167835	53,48	1167815	33,38
225	3,00	1149392	11,10	1149362	7,40	1149342	5,60	1149332	3,70	1149312	1,90
250	3,00	1150392	11,10	1150362	7,40	1150342	5,60	1150332	3,70	1150312	1,90
275	3,00	11589929	14,40	11589629	10,80	11589429	7,20	11589329	5,40	11589129	2,70
300	3,00	1151392	16,10	1151362	10,70	1151342	8,00	1151332	5,40	1151312	2,70
315	3,00	1152392	19,65	1152362	12,90	1152342	9,75	1152332	6,60	1152312	3,30
350	3,00	1153392	22,00	1153362	14,60	1153342	11,00	1153332	7,30	1153312	3,70
400	3,00	1154392	28,60	1154362	19,10	1154342	14,30	1154332	9,50	1154312	4,80
450	3,00	1155992	36,40	1155962	24,20	1155942	18,20	1155932	12,10	1155912	6,10
500	3,00	1156992	44,90	1156962	29,90	1156942	22,40	1156932	15,00	1156912	7,50
550	3,00	1157992	54,40	1157962	36,20	1157942	27,20	1157932	18,10	1157912	9,10
600	3,00	1158992	64,70	1158962	43,20	1158942	32,40	1158932	21,60	1158912	10,80
630	3,00	1159995	77,48	1159965	53,78	1159945	41,98	1159935	30,08	1159915	18,28
650	3.00	1160995	82,57	1160965	57,17	1160945	44,57	1160935	31,87	1160915	19,27
700	3,00	1161995	95,25	1161965	65,85	1161945	51,15	1161935	36,45	1161915	21,75
750	3,00	1162995	111,47	1162965	77,67	1162945	60,77	1162935	43,97	1162915	27,07
800	3,00	1163995	126,01	1163965	87,61	1163945	68,41	1163935	49,21	1163915	30,01
850	3,00	1164995	141,35	1164965	98,05	1164945	76,55	1164935	54,85	1164915	33,15
900	3,00	1165995	158,10	1165965	109,40	1165945	75,10	1165935	60,80	1165915	36,40
950	3,00	1166995	175,34	1166965	121,14	1166945	94,04	1166935	66,94	1166915	39,84
1000	3,00	1167995	193,68	1167965	133,58	1167945	103,58	1167935	73,48	1167915	43,48

Item numbers designated with D ≤ 600 mm are for segment bends assembled with pull rings [f.lyn]. Item numbers designated with D ≥ 630 mm are for ducts with flange [m.fl]. 2 and 3 mm ducts are also available for other assembly methods. See p. 7 for assembly methods.