Tapers, 2 and 3 mm

Diameter A for 2 mm: ø100 - ø1000 mm.
Diameter A for 3 mm: ø160 - ø1000 mm.

Tapers are made in standard dimensions as stated in the table. Other dimensions can be made to order. Tapers with A ≤ 600 mm are supplied as standard for assembly with pull rings [f.b]. Tapers with A ≥ 630 mm are supplied as standard with flanges [m.fl]. When ordering standard tapers, state A and B dimensions and assembly method. L will depend on the difference between A and B.

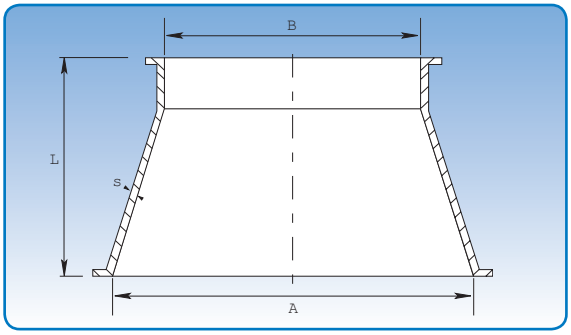

Dimensional specifications for standard tapers are given in the table below.

Dimensions					
Item no.	A mm	B mm	s mm	L mm	Weight kg
1842417	100	80	2,00	150	0,74
1842428	120	100	2,00	150	0,89
1844435	125	100	2,00	150	0,92
1844437	125	120	2,00	150	0,92
1844448	140	100	2,00	200	1,38
1846454	150	100	2,00	200	1,48
1846455	150	120	2,00	200	1,48
1846456	150	125	2,00	150	1,11
1846457	150	140	2,00	150	1,11
1847464	160	100	2,00	250	1,97
1847465	160	120	2,00	200	1,58
1847466	160	125	2,00	200	1,58
1847467	160	150	2,00	150	1,18
1847468	160	140	2,00	150	1,18
1848475	180	100	2,00	300	1,84
1848476	180	125	2,00	250	1,68
1848477	180	150	2,00	200	1,57
1849482	200	100	2,00	300	1,98
1849483	200	125	2,00	250	1,79
1849484	200	140	2,00	250	1,88
1849485	200	150	2,00	200	1,65
1849486	200	160	2,00	200	1,68
1849487	200	180	2,00	150	1,36
1850496	225	180	2,00	150	1,66
1850497	225	200	2,00	200	2,22
1851399	250	150	2,00	300	3,70
1851401	250	160	2,00	300	3,70
1851403	250	180	2,00	250	3,08
1851405	250	200	2,00	200	2,47
1851407	250	225	2,00	150	1,85
1852110	275	250	2,00	150	2,03
1852111	275	225	2,00	200	2,71
1852112	275	200	2,00	250	3,39
1852415	300	200	2,00	300	4,44
1852416	300	225	2,00	250	3,70
1852417	300	250	2,00	200	2,96
1852418	300	275	2,00	150	2,22
1853426	315	300	2,00	150	2,33
1853427	315	275	2,00	200	3,11
1853428	315	250	2,00	250	3,88
1854435	350	250	2,00	300	5,18
1854436	350	275	2,00	200	3,45
1854437	350	300	2,00	250	4,32
1855445	400	315	2,00	300	5,92
1855446	400	350	2,00	300	5,92
1855447	400	300	2,00	250	4,93

Tapers, 2 and 3 mm

Dimensions					
Item no.	A mm	B mm	s mm	L mm	Weight kg
1856458	450	350	2,00	200	4,44
1857466	500	450	2,00	300	6,66
1857467	450	400	2,00	200	4,93
1857468	500	400	2,00	300	7,40
1858478	550	450	2,00	300	8,14
1859488	600	500	2,00	300	8,88
1860498	630	550	2,00	300	14,82
1861408	650	550	2,00	300	15,17
1862418	700	600	2,00	300	17,38
1863428	750	650	2,00	300	19,94
1864438	800	700	2,00	300	11,84
1865448	850	750	2,00	300	21,71
1866458	900	800	2,00	300	23,63
1867458	950	850	2,00	300	24,97
1868458	1000	900	2,00	300	26,30
1846760	160	150	3,00	150	1,78
1849780	200	150	3,00	200	2,66
1849781	200	160	3,00	200	2,74
1849782	200	180	3,00	150	2,16
1850796	225	180	3,00	200	3,03
1850797	225	200	3,00	150	2,39
1851706	250	225	3,00	150	2,66
1851707	250	200	3,00	200	3,48
1852210	275	250	3,00	150	3,00
1852211	275	225	3,00	200	3,11
1852715	300	200	3,00	300	5,77
1852717	300	250	3,00	200	4,14
1852718	300	275	3,00	150	3,22
1853727	315	275	3,00	200	4,44
1853728	315	300	3,00	150	3,44
1854735	350	300	3,00	200	4,88
1854736	350	315	3,00	200	5,03
1855748	400	350	3,00	200	5,62
1856758	450	400	3,00	200	6,36
1857767	500	400	3,00	300	10,21
1857768	500	450	3,00	200	7,10
1858778	550	450	3,00	300	11,32
1859788	600	500	3,00	300	12,43
1860798	630	550	3,00	300	18,60
1861708	650	550	3,00	300	19,09
1862718	700	600	3,00	300	21,67
1883728	750	650	3,00	300	24,60
1864738	800	700	3,00	300	26,00
1865748	850	750	3,00	300	27,71
1866758	900	800	3,00	300	29,40
1867758	950	850	3,00	300	31,11
1868758	1000	900	3,00	300	32,81

Specifications for relationship between diameter (A - B) and length (L) for non-standard tapers. Length L will depend on the difference between A and B. Please state A, B and L measurements when ordering.

A - B [mm]	25	50	75	100	125	150	175	200	225	250	275	300
L [mm]	100	150	200	250	300	350	400	450	500	550	600	650