Ducts, 2 and 3 mm

Diameter for 2 mm: ø80 - ø1250 mm.

2 and 3 mm ducts D ≤ 600 mm supplied as standard for pull rings [f.b]. Ducts with D = ø630 mm - ø1250 mm supplied with flanges [m.fl].

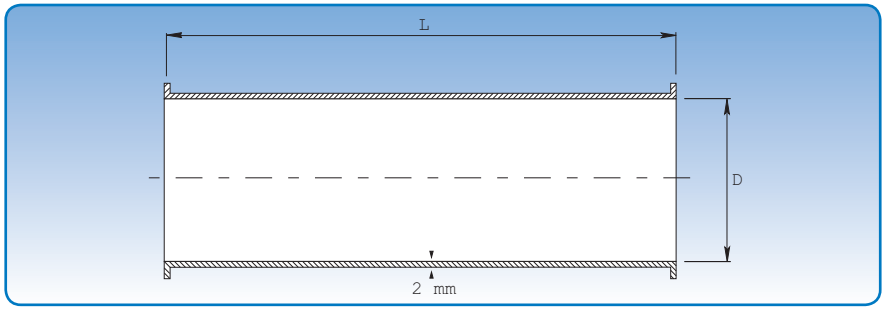

Dimensional specifications are given in the table below.

Dimensions								
	L = 0.2 m		L = 0.5 m		L = 1.0 m		L = 2.0 m	
D mm	Item no.	kg	Item no.	kg	Item no.	kg	Item no.	kg
80	1040121	0,80	1040131	2,00	1040141	4,00	1040151	8,00
100	1041291	1,10	1041131	2,50	1041141	5,00	1041151	10,00
120	1042291	1,30	1042131	3,10	1042141	6,20	1042151	12,40
125	1043291	1,40	1043131	3,20	1043141	6,40	1043151	12,80
140	1044291	1,50	1044131	3,50	1044141	7,00	1044151	14,20
150	1045291	1,60	1045131	3,80	1045141	7,60	1045151	15,20
160	1046291	1,70	1046131	4,10	1046141	8,20	1046151	16,40
180	1047291	1,80	1047131	4,60	1047141	9,10	1047151	18,20
200	1048291	2,10	1048131	5,10	1048141	10,20	1048151	20,40
225	1049291	2,40	1049131	5,80	1049141	11,30	1049151	22,70
250	1050291	2,70	1050131	6,30	1050141	12,60	1050151	25,20
300	1051291	3,20	1051131	7,60	1051141	15,20	1051151	30,40
315	1052291	3,30	1052131	7,70	1052141	15,50	1052151	31,00
350	1053291	3,80	1053131	8,90	1053141	16,80	1053151	33,80
400	1054291	4,30	1054131	10,10	1054141	20,20	1054151	40,40
450	1055291	4,90	1055131	11,40	1055141	22,80	1055151	45,60
500	1056291	5,40	1056131	12,60	1056141	25,20	1056151	50,40
550	1057291	6,00	1057131	13,90	1057141	27,80	1057151	55,60
600	1058291	6,60	1058131	15,20	1058141	30,40	1058151	60,80
630	1059295	12,80	1059135	22,30	1059145	38,20	1059155	70,00
650	1060295	13,20	1060135	23,00	1060145	39,40	1060155	72,00
700	1061295	14,20	1061135	24,70	1061145	42,30	1061155	77,50
750	1062295	17,80	1062135	29,00	1062145	48,00	1062155	85,80
800	1063295	18,90	1063135	31,00	1063145	52,20	1063155	91,70
850	1064295	20,00	1064135	32,90	1064145	54,40	1064155	97,00
900	1065295	21,20	1065135	34,80	1065145	57,40	1065155	102,70
950	1066295	22,40	1066135	36,80	1066145	60,80	1066155	108,80
1000	1067295	23,50	1067135	38,60	1067145	63,80	1067155	114,20
1100	-	-	1068135	42,50	1068145	71,10	1068155	126,50
1250	-	-	1069135	45,20	1069145	76,70	1069155	129,70

Item numbers designated with D ≤ 600 mm are for ducts assembled with pull rings [f.b].

Item numbers designated with D ≥ 630 mm are for ducts with flanges [m.fl].

2 and 3 mm ducts are also available for other assembly methods. See p. 7 for assembly methods.

Ducts, 2 and 3 mm

Diameter for 3 mm: ø150 - ø1250 mm.

2 and 3 mm ducts D ≤ 600 mm supplied as standard for pull rings [f.b]. Ducts with D = ø630 mm - ø1250 mm supplied with flanges [m.fl].

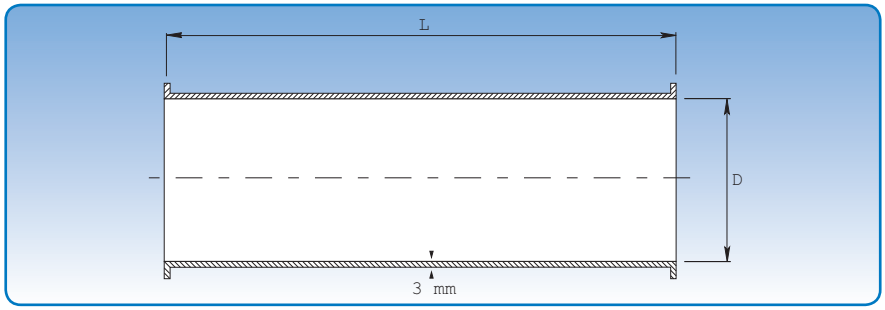

Dimensional specifications are given in the table below.

Dimensions								
	L = 0.2 m		L = 0.5 m		L = 1.0 m		L = 2.0 m	
D mm	Item no.	kg	Item no.	kg	Item no.	kg	Item no.	kg
150	1045391	2,40	1045161	5,70	1045171	11,40	1045181	22,80
160	1046391	2,50	1046161	6,10	1046171	12,20	1046181	24,40
180	1047391	2,70	1047161	6,80	1047171	13,60	1047181	27,20
200	1048391	3,20	1048161	7,60	1048171	15,20	1048181	30,40
225	1049391	3,60	1049161	8,60	1049171	17,10	1049181	34,20
250	1050391	4,00	1050161	9,60	1050171	19,00	1050181	38,00
300	1051391	4,80	1051161	11,40	1051171	22,80	1051181	45,60
315	1052391	5,00	1052161	11,70	1052171	23,30	1052181	46,60
350	1053391	5,70	1053161	13,30	1053171	26,60	1053181	53,20
400	1054391	6,50	1054161	15,20	1054171	30,40	1054181	60,80
450	1055391	7,30	1055161	17,10	1055171	34,20	1055181	68,40
500	1056391	8,10	1056161	19,00	1056171	38,00	1056181	76,00
550	1057391	8,40	1057161	20,90	1057171	41,80	1057181	83,60
600	1058391	9,70	1058161	22,70	1058171	45,40	1058181	90,80
630	1059395	15,90	1059165	35,20	1059175	54,00	1059185	101,60
650	1060395	16,30	1060165	31,20	1060175	55,80	1060185	105,00
700	1061395	17,70	1061165	33,50	1061175	59,90	1061185	112,70
750	1062395	21,50	1062165	36,00	1062175	66,80	1062185	123,40
800	1063395	23,00	1063165	41,00	1063175	71,20	1063185	131,60
850	1064395	24,40	1064165	43,50	1064175	76,70	1064185	139,90
900	1065395	25,70	1065165	46,10	1065175	80,00	1065185	148,10
950	1066395	27,20	1066165	48,70	1066175	84,60	1066185	156,40
1000	1067395	28,50	1067165	52,20	1067175	89,00	1067185	168,60
1100	-	-	1068165	56,30	1068175	98,00	1068185	181,00
1250	-	-	1069165	61,00	1069175	108,20	1069185	202,70

Item numbers designated with D ≤ 600 mm are for ducts assembled with pull rings [f.b].

Item numbers designated with D ≥ 630 mm are for ducts with flanges [m.fl].

2 and 3 mm ducts are also available for other assembly methods. See p. 7 for assembly methods.

Ducts with direct flange, 2 and 3 mm

Diameter: ø300 - ø1000 mm.

Ducts with direct flanges are welded and made of 2.00 and 3.00 mm sheet metal (s).

Ducts are supplied with direct flanges [d.fl] in same material as ducts.

Direct flanges can be fitted along with JKF's standard range of loose and welded flanges.
Item numbers stated are for primed ducts.

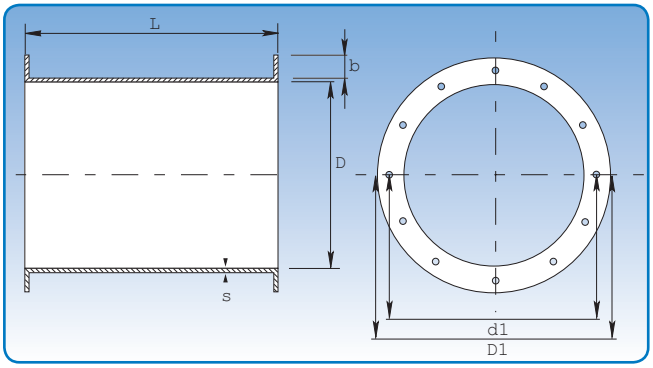

Dimensional specifications are given in the table below.

Dimensions

D mm	s mm	D1 mm	d1 mm	Weight at L = 0.2 m Item no.	kg	Weight at L = 0.5 m Item no.	kg	Weight at L = 1.0 m Item no.	kg	Weight at L = 2.0 m Item no.	kg	Quant. holes
300	2,00	354	336	1051299	3,20	1051139	7,60	1051149	15,20	1051159	30,40	12
315	2,00	370	351	1052299	3,30	1052139	7,90	1052149	15,80	1052159	31,60	12
350	2,00	415	389	1053299	3,80	1053139	8,90	1053149	17,80	1053159	35,60	12
400	2,00	465	439	1054299	4,30	1054139	10,10	1054149	20,20	1054159	40,40	16
450	2,00	515	489	1055299	4,90	1055139	11,40	1055149	22,80	1055159	45,60	16
500	2,00	565	540	1056299	5,40	1056139	12,60	1056149	25,20	1056159	50,40	16
550	2,00	615	590	1057299	6,00	1057139	13,90	1057149	27,80	1057159	55,60	16
600	2,00	665	640	1058299	6,60	1058139	15,20	1058149	30,40	1058159	60,80	16
630	2,00	695	670	1059299	6,40	1059139	15,90	1059149	31,80	1059159	63,60	24
650	2,00	715	690	1060299	6,60	1060139	16,40	1060149	32,80	1060159	65,60	24
700	2,00	785	750	1061299	7,10	1061139	17,60	1061149	35,20	1061159	70,40	24
750	2,00	835	800	1062299	7,60	1062139	18,90	1062149	37,80	1062159	75,60	24
800	2,00	885	850	1063299	8,10	1063139	20,20	1063149	40,40	1063159	80,80	24
850	2,00	935	900	1064299	8,60	1064139	21,40	1064149	42,80	1064159	85,60	24
900	2,00	985	950	1065299	9,10	1065139	22,70	1065149	45,30	1065159	90,60	24
950	2,00	1035	1000	1066299	9,60	1066139	24,00	1066149	48,00	1066159	96,00	24
1000	2,00	1085	1050	1067299	10,10	1067139	25,20	1067149	50,40	1067159	100,80	24
300	3,00	354	336	1051399	4,80	1051169	11,40	1051179	22,80	1051189	45,60	12
315	3,00	370	351	1052399	5,00	1052169	11,90	1052179	23,70	1052189	47,40	12
350	3,00	415	389	1053399	5,70	1053169	13,30	1053179	26,60	1053189	53,20	12
400	3,00	465	439	1054399	6,50	1054169	15,20	1054179	30,40	1054189	60,80	16
450	3,00	515	489	1055399	7,30	1055169	17,10	1055179	34,20	1055189	68,40	16
500	3,00	565	540	1056399	8,10	1056169	19,00	1056179	38,00	1056189	76,00	16
550	3,00	615	590	1057399	8,40	1057169	20,90	1057179	41,80	1057189	83,60	16
600	3,00	665	640	1058399	9,70	1058169	22,70	1058179	45,40	1058189	90,80	16
630	3,00	695	670	1059399	9,50	1059169	23,80	1059179	47,60	1059189	95,20	24
650	3,00	715	690	1060399	9,70	1060169	24,60	1060179	49,20	1060189	98,40	24
700	3,00	785	750	1061399	10,60	1061169	26,40	1061179	52,80	1061189	105,60	24
750	3,00	835	800	1062399	11,30	1062169	28,30	1062179	56,60	1062189	113,20	24
800	3,00	885	850	1063399	12,10	1063169	30,20	1063179	60,40	1063189	120,80	24
850	3,00	935	900	1064399	12,90	1064169	32,10	1064179	64,20	1064189	128,40	24
900	3,00	985	950	1065399	13,60	1065169	34,00	1065179	68,00	1065189	136,00	24
950	3,00	1035	1000	1066399	14,40	1066169	35,90	1066179	71,80	1066189	143,60	24
1000	3,00	1085	1050	1067399	15,10	1067169	37,80	1067179	75,60	1067189	151,20	24

Duct length/flange width/hole size

D mm	b mm	L = 0.2 m mm	L = 0.5 m mm	L = 1.0 m mm	L = 2.0 mm	Hole size mm
300 - 315	25	200	455	955	1955	9
350 - 650	30	200	445	945	1945	11
700 - 1000	40	200	425	925	1925	11